Surface Mount Polymeric ESD Suppressors

Description

■ This device is an ultra low capacitance PESD product designed to protect very high speed data interfaces. CMPE0603V05MSP has a typical capacitance of only 0.05pf (I/O to GND), and it can be used to meet the ESD immunity requirements of IEC61000-4-2 (15KV air, 8KV contact discharge).

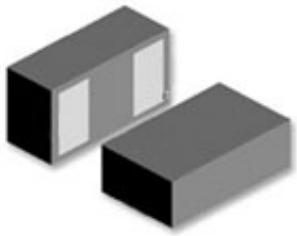

Feature

■ ESD protection for high speed data lines to IEC61000-4-2
■ ESD contact discharge typical 8KV, max 15KV
■ ESD air discharge typical 15KV, max 25KV
■ Surface mount
■ Extremely low capacitance
■ Very low leakage current
■ Fast response time
■ Bi-directional ESD protection
■ Lead free solder termination
■ The best ESD protection for high frequency, low voltage applications

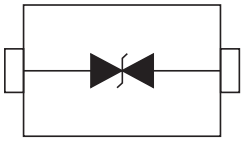

Schematic Diagram

Application

■ High Definition Multi-Media Interface (HDMI)
■ Digital Visual Interface (DVI)
■ Display Port Interface (DP)
■ Unified Display Interface (UDI)
■ Mobile Display Digital Interface (MDDI)
■ Gigabit Ethernet
■ USB2.0 and USB3.0
■ IEEE1394 interface

Absolute Maximum Ratings

Parameter	Symbol	Value	Unit
Maximum Contact discharge voltage Per IEC61000-4-2	---	15KV	V
Maximum Air discharge voltage Per IEC61000-4-2	---	25KV	V
Maximum Operating temperature	T_{OPER}	-55 to +125	℃
Maximum Storage temperature	T_{STG}	-25 to +35	℃
Maximum lead temperature for soldering during 10s	T_L	260	℃

Electrical Characteristics(T_A=25℃)

Parameter	Symbol	Test Conditions	Min	Typ	Max	Units
Rated Voltage	V_R	---	---	---	05	V
Trigger voltage	V_T	IEC61000-4-2 8KV contact discharge	---	350	---	V
Clamping voltage	V_C	IEC61000-4-2 8KV contact discharge	---	35	---	V
Leakage current	I_L	DC 30V shall be applied on component	---	0.01	0.1	uA
Capacitance	C_P	V_R = 0V, f = 1MHz	---	0.05		pF

Note: 1 Trigger and clamping voltage are measured per IEC 61000-4-2, 8KV contact discharge method.

2 After reliability tests such as high temp storage, temp cycles, continuous ESD strike etc, the maximum leakage current is less than 10uA.

ESD Clamping Test

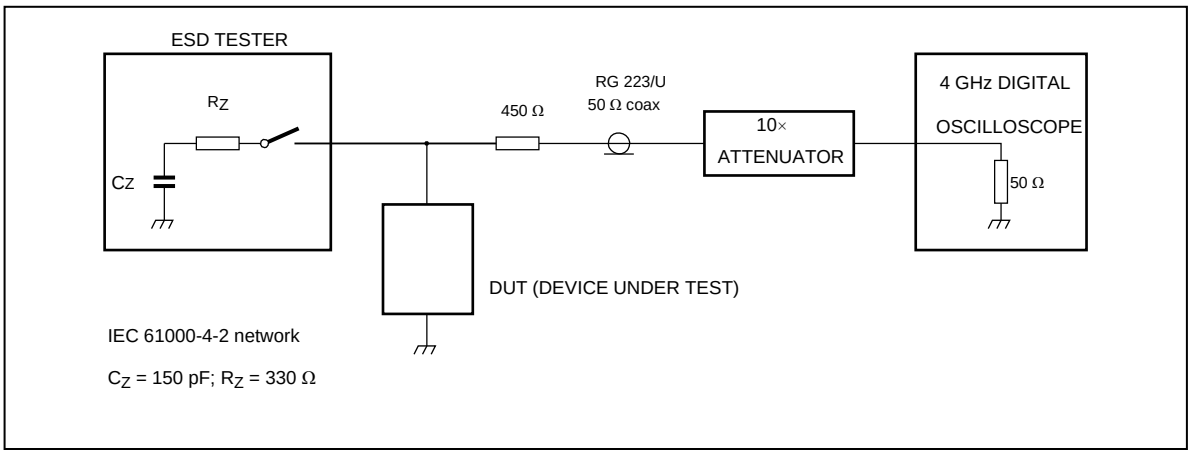

ESD Clamping Test Waveforms

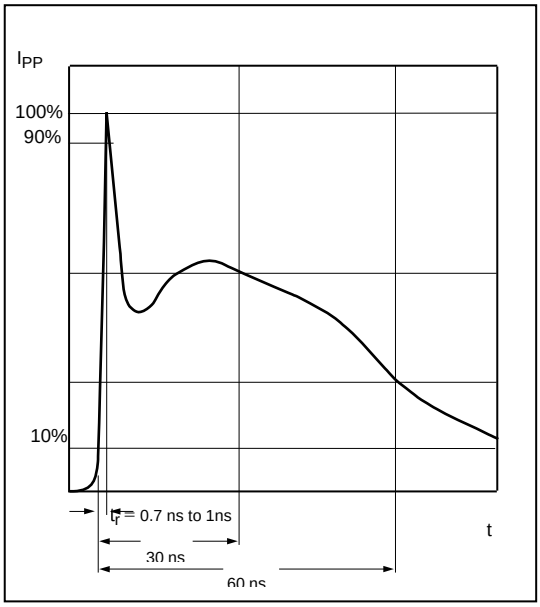

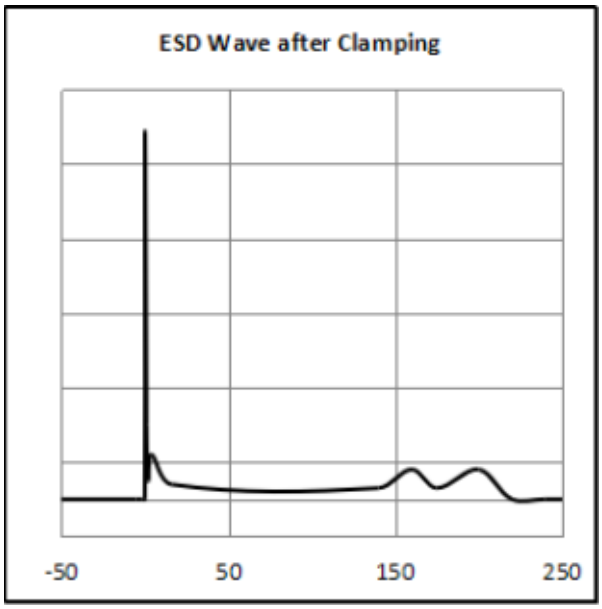

Solder Reflow Recommendations

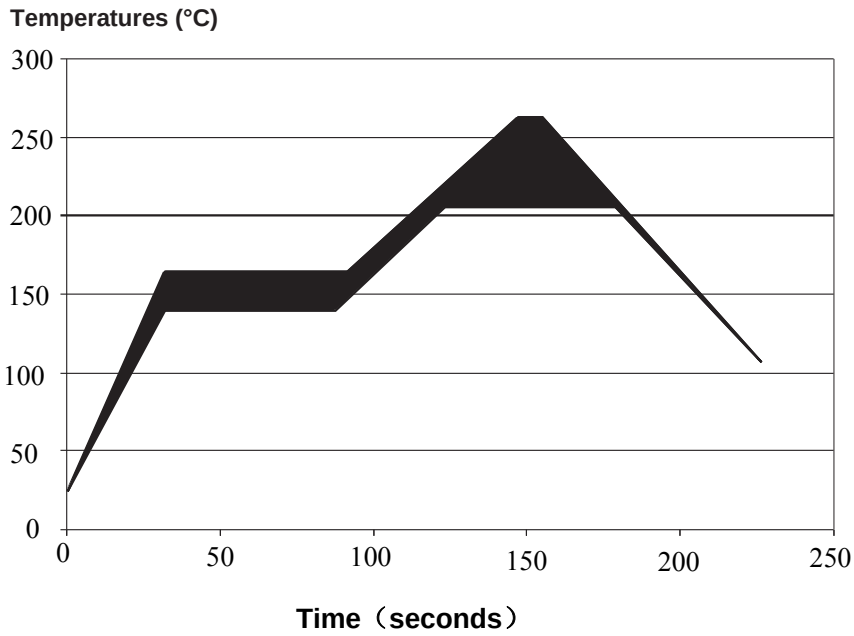

PRODUCT IDENTIFICATION

CMPE	0603	V	05	MS	P
(1)	(2)	(3)	(4)	(5)	(6)

(1) Series Type
(2) Chip Size（inch）:Length X Width
(3) Material Code
(4) Rated Voltage, V_{DC}
(5) Company Code
(6) Packaging：P – Embossed paper tape, 7" reel
E – Embossed plastic tape, 7" reel

Order Information

Device	Package	Net Weight	Carrier	Quantity	HSF Status
CMPE0603V05MSP	0603	0.9 mg	Tape & Reel	5,000pcs/reel	RoHS compliant

Revision history

Date	Revision	Description of changes
14-Dec-2016	3.0	Change Dimensions, Low Vt

TYPICAL APPLICATIONS

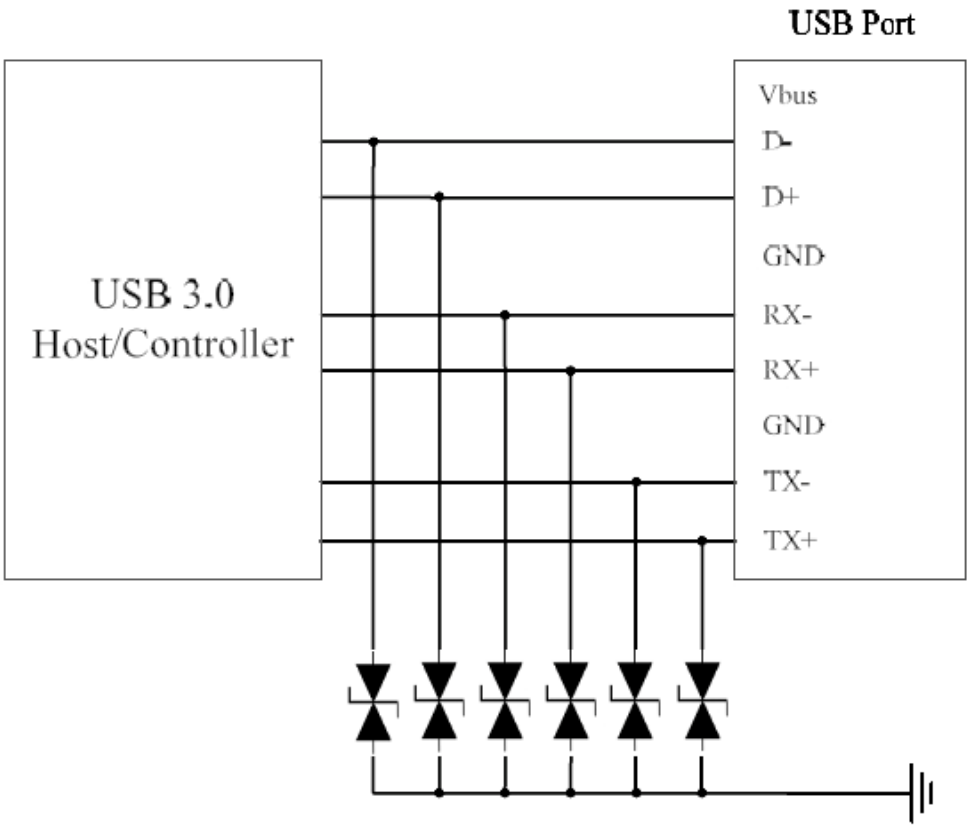

ESD protection for USB3.0 port

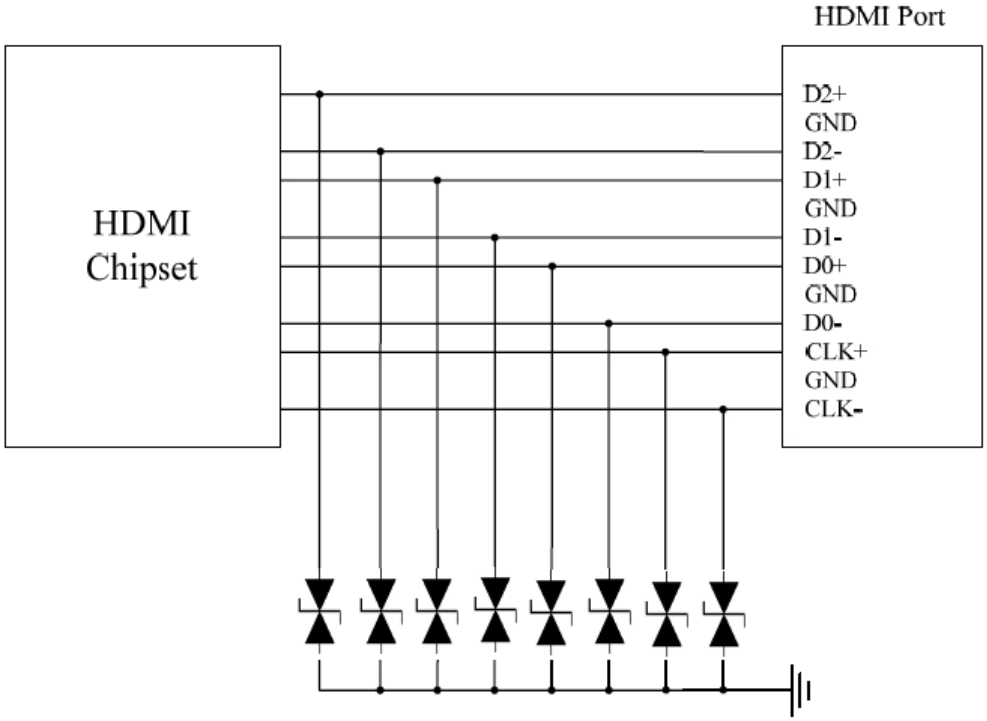

ESD protection for HDMI port

Product Dimension

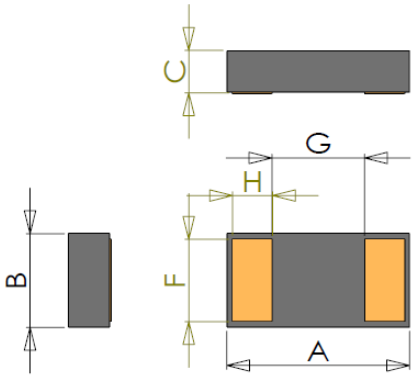

Symbol	Dimension			Unit
	Min	Typ	Max	
A	1.50	1.60	1.70	mm
B	0.70	0.80	0.90	
C	0.32	0.36	0.4	
H	0.345	0.365	0.385	
F	0.715	0.735	0.755	
G	0.78	0.80	0.82	

PAD Dimension

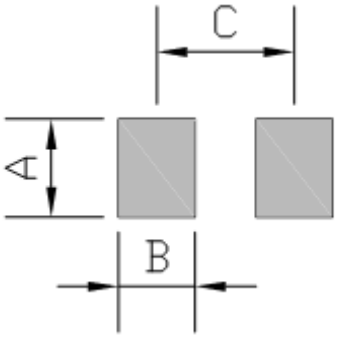

Symbol	Dimension	Unit
A	0.95	mm
B	0.65	
C	1.35	

Solder thickness 0.08 to 0.12mm

Package Information

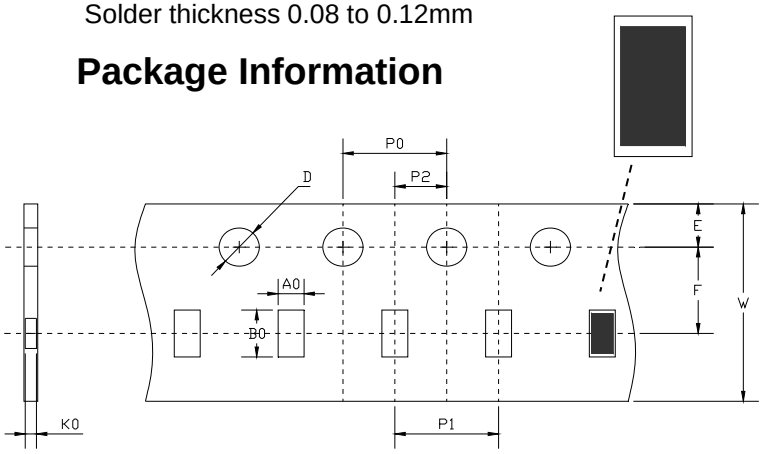

Dimension	Typical	Unit
A0	1.10	mm
B0	1.90	
K0	0.43	
D	1.55	
P0	4.00	
P1	4.00	
P2	2.00	
E	1.75	
F	3.50	
W	8.00	

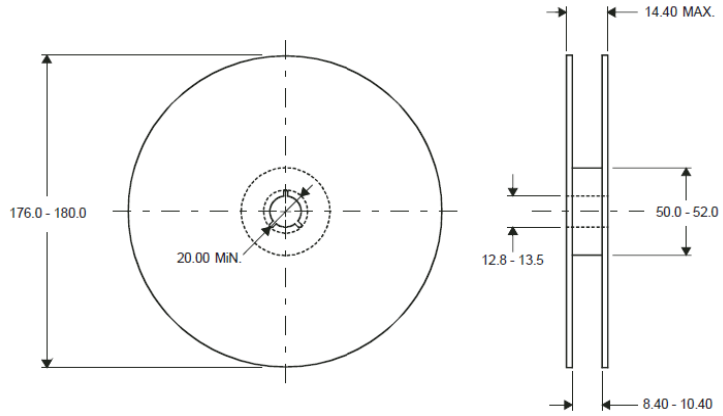

DIMENSIONS ARE: MILLIMETERS